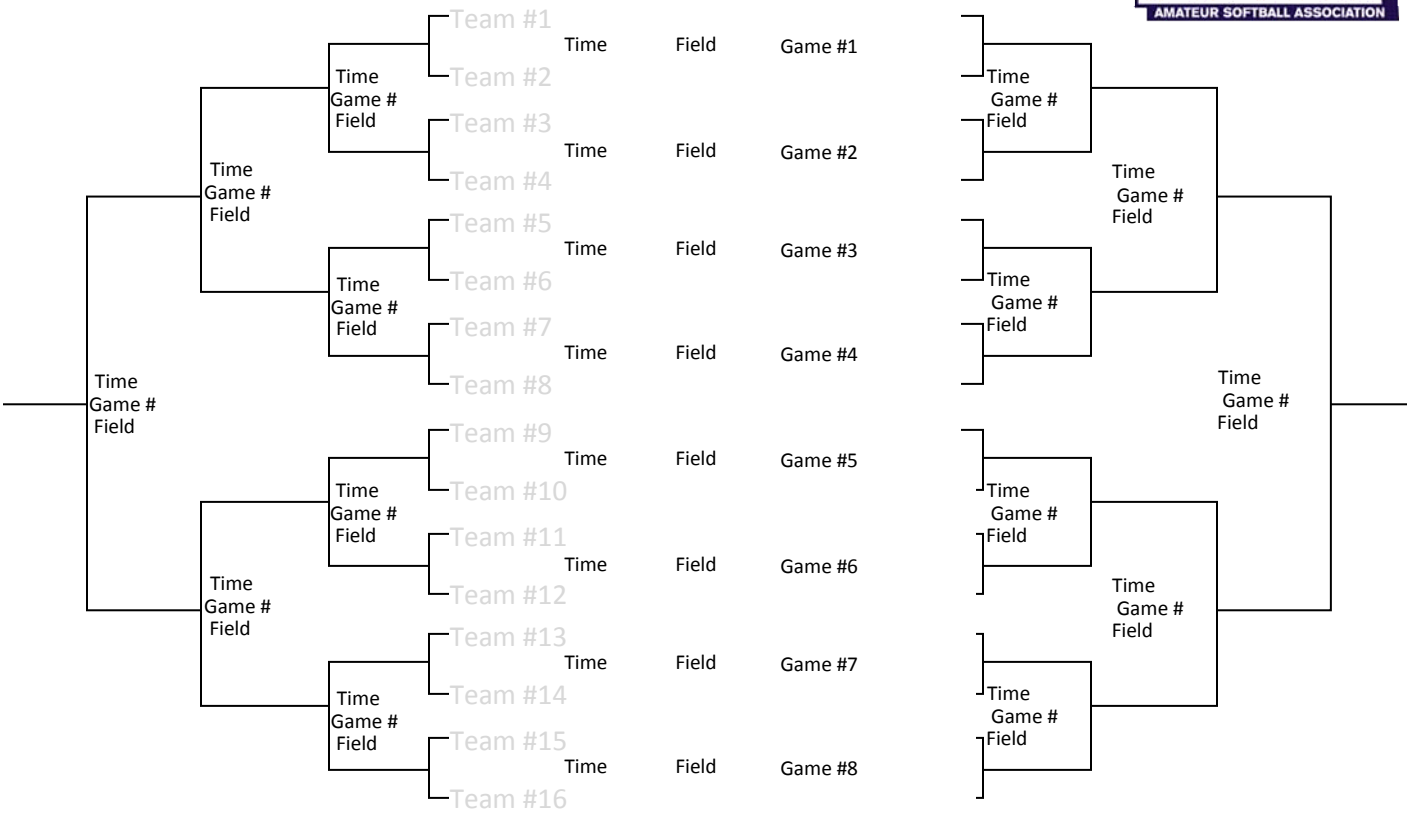
Team #1
Time
Field
Game #1
Team #2
Time
Game #
Field
Team #3
Time
Field
Game #2
Team #4
Time
Game #
Field
Time
Game #
Field
Team #5
Time
Field
Game #3
Team #6
Time
Game #
Field
Team #7
Time
Field
Game #4
Team #8
Time
Game #
Field
Time
Game #
Field
Team #9
Time
Field
Game #5
Team #10
Time
Game #
Field
Team #11
Time
Field
Game #6
Team #12
Time
Game #
Field
Time
Game #
Field
Team #13
Time
Field
Game #7
Team #14
Time
Game #
Field
Team #15
Time
Field
Game #8
Team #16

3rd Place

Time
Field
Game #